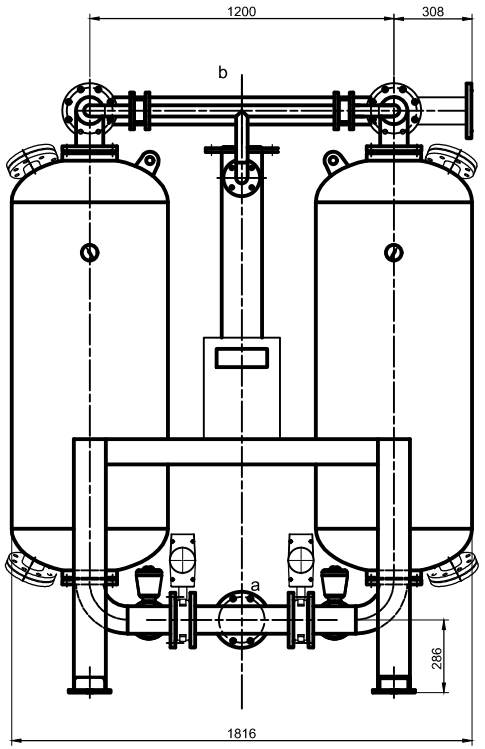

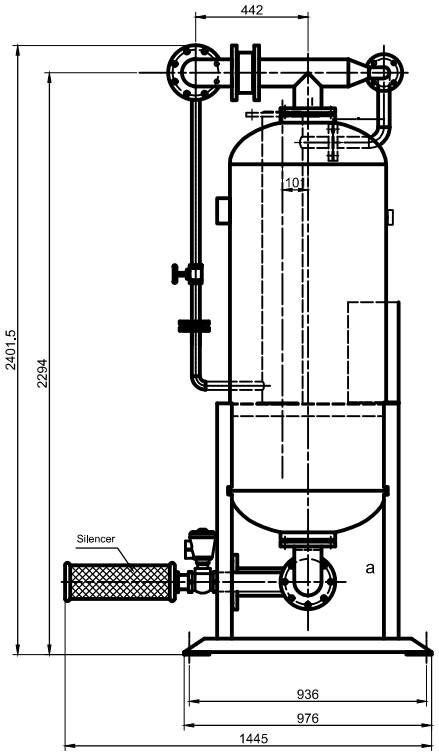

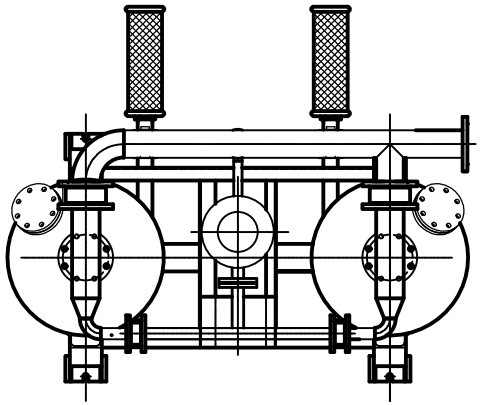

Technical characteristics table

Design pressure: MPa	1.0	Adsorbent:	Alumina
Work pressure: MPa	0.6～1.0	Intake air temperature:℃	≤45
Pressure loss: MPa	≤0.02	Pressure dew point:℃	-20~-40℃
Regeneration method:		Micro heat regeneration	
Regenerative gas:		4%～6%	
Processing capacity: Nm³/min		45	
Control method:		MCU control	
Working medium:		Compressed air	
Voltage:		380V/50Hz	
Heating power:kW		11.7	
Intake oil content: mg/m³		0.1	
Weight: KG		1700	
Note: This equipment is installed without foundation, and the ground flatness requirement is 1/1000.			

Orifice table

Symbol	Nominal diameter	Connection size standard	Connection method	Name and purpose
a	100	HG20592 PL100-1.6	RF	Air inlet
b	100	HG20592 PL100-1.6	RF	Air outlet

DAD-40MXF

DENAIR